PART NAME	IP67 SERIES NEMA DIE CAST ALUMINUM BOX	PART No.	IPS-3916	REVISION DATE	1/24/11

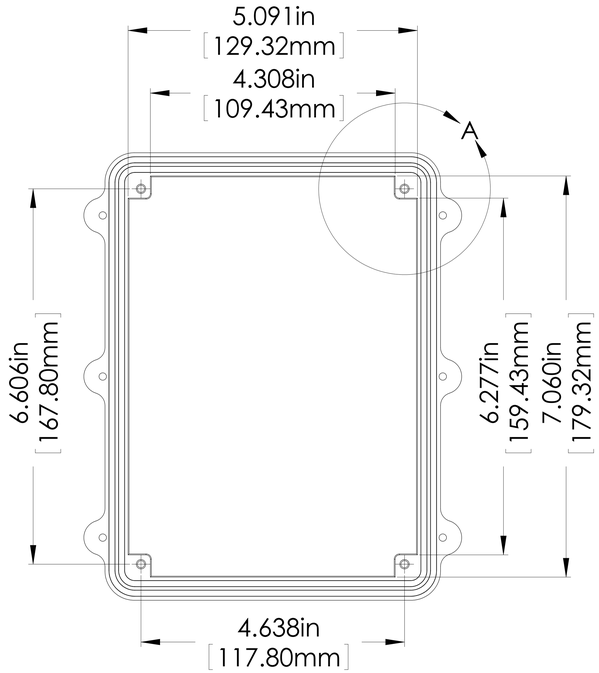

INSIDE BODY DETAILS

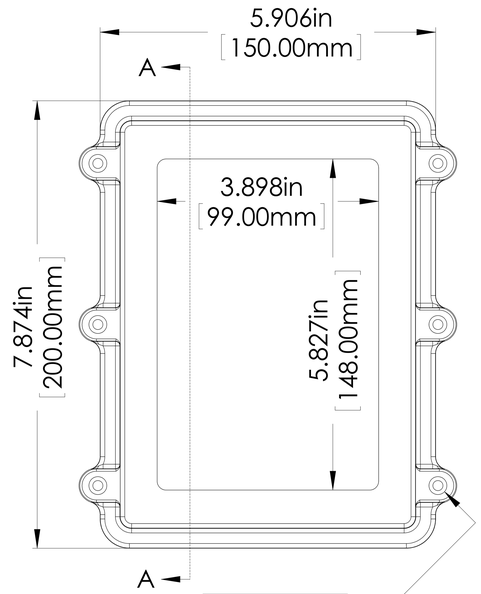

TOP VIEW

SIX (6) M4x0.7 PITCH
x 20mm (.787in.) LG.
FLAT HEAD SCREWS

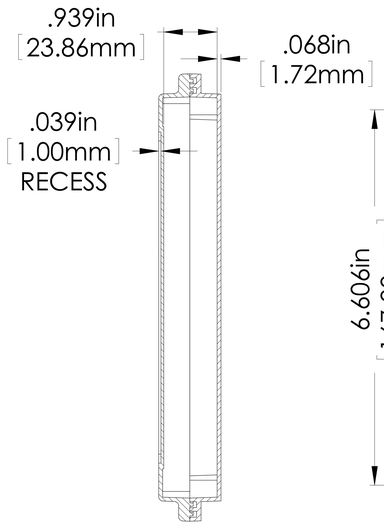

SECTION A-A

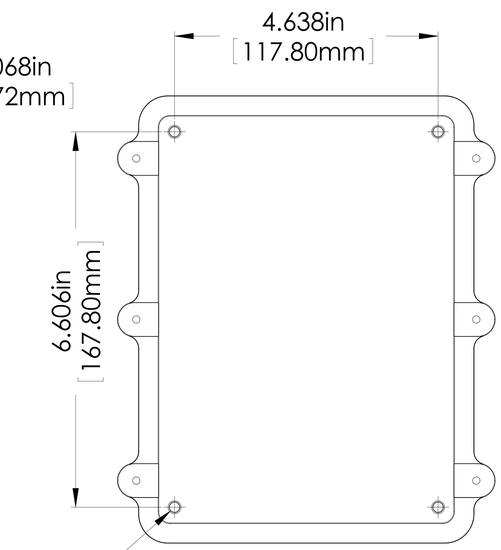

BOTTOM VIEW

∅.177in
[4.50mm]
x 7.5mm (.295in.) DP. (4x)
[ACCEPTS M5 x 10mm(.394in.) LG.
SELF-TAPPING SCREWS.
(NOT SUPPLIED)]

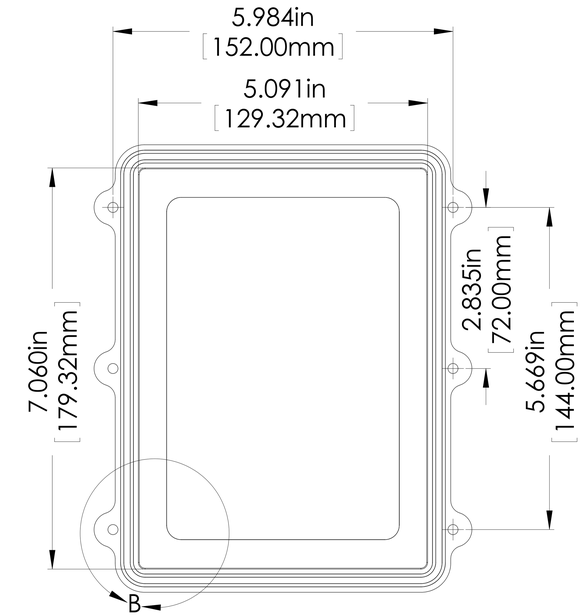

INSIDE COVER DETAILS

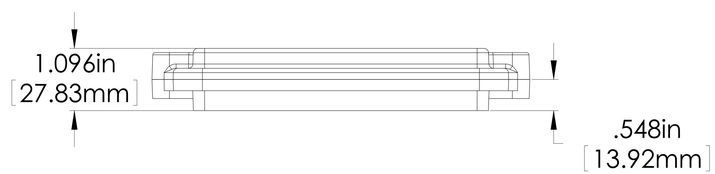

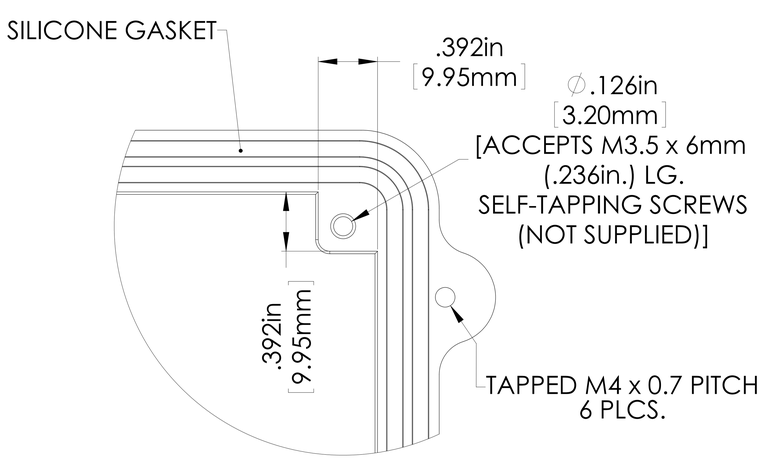

DETAIL A
SCALE 4 : 1

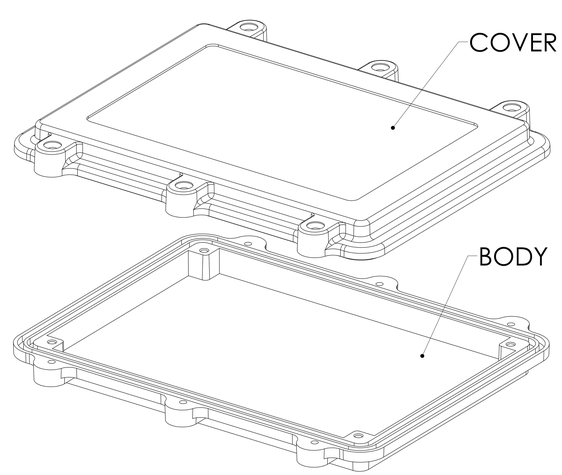

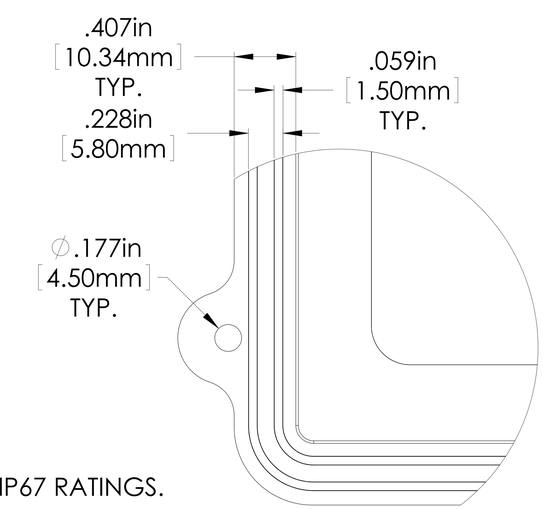

DETAIL B
SCALE 4 : 1

MEETS NEMA 1, 2, 4, 4X, 12, 13 AND IP67 RATINGS.

MATERIAL: ALUMINUM ALLOY ADC-12

FINISH: NATURAL

TOLERANCES: ALL HOLE DIAMETERS: ±.005in (.13mm)
ALL OTHER DIMENSIONS: ±.015in (.38mm)