WORLDWIDE FRACTIONAL HP MOTORS

Jet Pump Motors

TEFC Enclosure ▪ C-Face ▪ Removable Base

Single-Phase ▪ 115-208-230 Volt

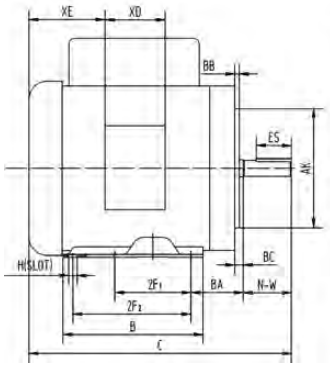

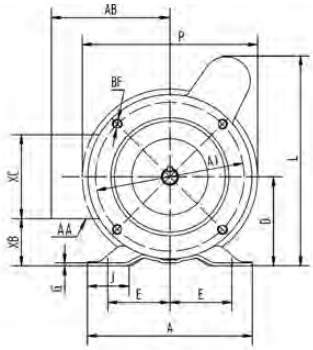

1/3 - 1 HP

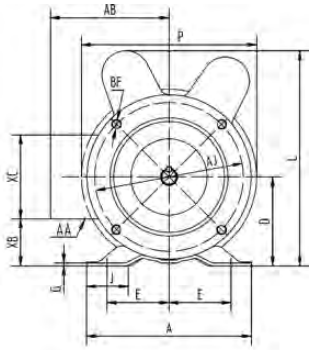

1.5 - 2 HP

Keyed Shaft

ALL DIMENSIONS IN INCHES

Model	S	ES	R	N-W	U	AA	BC	AK	AJ	BF	BB	XB	XC	XD	XE
TJ13-36-56CB-NOL	0.188	1.41	0.517	1.88	0.625	1/2	0.19	4.5	5.875	3/8-16	0.16	1.65	3.7	3.23	2.85
TJ12-36-56CB-NOL	0.188	1.41	0.517	1.88	0.625	1/2	0.19	4.5	5.875	3/8-16	0.16	1.65	3.7	3.23	2.85
TJ34-36-56CB-NOL	0.188	1.41	0.517	1.88	0.625	1/2	0.19	4.5	5.875	3/8-16	0.16	1.65	3.7	3.23	2.85
TJ1-36-56CB-NOL	0.188	1.41	0.517	1.88	0.625	1/2	0.19	4.5	5.875	3/8-16	0.16	1.65	3.7	3.23	2.85
TJ1.5-36-56CB-NOL	0.188	1.41	0.517	1.88	0.625	1/2	0.19	4.5	5.875	3/8-16	0.16	1.65	3.7	3.23	2.85
TJ2-36-56CB-NOL	0.188	1.41	0.517	1.88	0.625	1/2	0.19	4.5	5.875	3/8-16	0.16	1.65	3.7	3.23	2.85

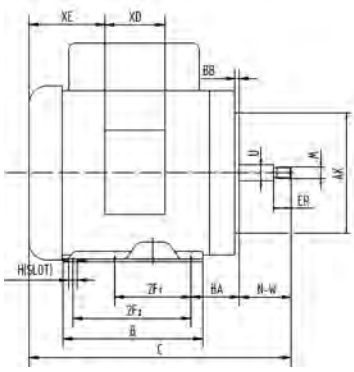

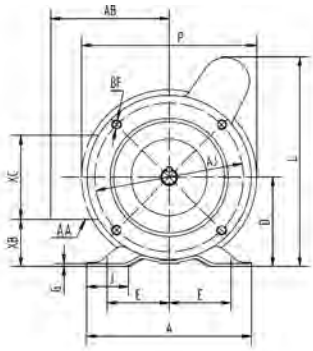

1/3 - 1 HP

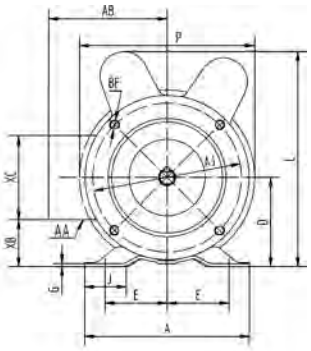

1.5 - 2 HP

Threaded Shaft

ALL DIMENSIONS IN INCHES

Model	N-W	U	ER	M	AA	AK	AJ	BF	BB	XB	XC	XD	XE
TJ13-36-56JB	2.4	0.625	0.68	7/16-20	1/2	4.5	5.875	3/8-16	0.16	1.65	3.7	3.23	2.85
TJ12-36-56JB	2.4	0.625	0.68	7/16-20	1/2	4.5	5.875	3/8-16	0.16	1.65	3.7	3.23	2.85
TJ34-36-56JB	2.4	0.625	0.68	7/16-20	1/2	4.5	5.875	3/8-16	0.16	1.65	3.7	3.23	2.85
TJ1-36-56JB	2.4	0.625	0.68	7/16-20	1/2	4.5	5.875	3/8-16	0.16	1.65	3.7	3.23	2.85
TJ1.5-36-56JB	2.4	0.625	0.68	7/16-20	1/2	4.5	5.875	3/8-16	0.16	1.65	3.7	3.23	2.85
TJ2-36-56JB	2.4	0.625	0.68	7/16-20	1/2	4.5	5.875	3/8-16	0.16	1.65	3.7	3.23	2.85

Dimensions shown in this catalog are for general use only.
For an exact drawing on a specific rating, please contact our sales office.