## HyLoft 48" x 96" Limited Warranty

Diamond Storage Concepts warrants this product against defects in material or workmanship for the life of the product. Diamond Storage Concepts agrees to either repair the product or replace it at the sole discretion of Diamond Storage Concepts. This warranty does not include any costs associated with the physical installation, removal or return of the HyLoft storage system.

**This warranty is valid and enforceable provided that the maximum weight supported by each 48" x 96" HyLoft unit does not exceed 600 pounds, evenly distributed. The customer, dealer, and/or installer releases Diamond Storage Concepts of all claims, which includes the HyLoft unit and the structure it is attached to, if the loaded weight exceeds 600 pounds. The unit must also be installed according to the manufacturer's instructions. At no time should you install more than one HyLoft unit on any two ceiling beams (rafters, studs, roof trusses, etc.). All fasteners must be checked and tightened at least annually.**

Only the original purchaser of this product is extended this warranty. No warranty work will be provided under this warranty without purchaser's receipt or other proof of the date of original purchase acceptable to Diamond Storage Concepts. Proof of the date of purchase must be provided to Diamond Storage Concepts if the product is returned.

This Diamond Storage Concepts limited warranty covers product failure due to defects in materials or workmanship ONLY! It does not cover corrosion, rust or discoloration of its components, or product failure due to misuse, abuse, faulty installation, alteration, lack of reasonable care, or any other failure not related to defects in materials or workmanship.

There are NO other warranties expressed or implied except those stated here in as required by applicable law.

DIAMOND STORAGE CONCEPTS SHALL NOT BE LIABLE FOR INCIDENTAL, SPECIAL OR CONSEQUENTIAL DAMAGES RESULTING FROM THE USE OF THE PRODUCT OR ARISING OUT OF ANY BREACH OF THIS WARRANTY. ALL IMPLIED WARRANTIES, IF ANY, INCLUDING IMPLIED WARRANTIES OF MERCHANTABILITY AND FITNESS FOR A PARTICULAR PURPOSE, ARE LIMITED IN DURATION TO THE DURATION OF THIS WARRANTY. Some states do not allow the exclusion or limitation of incidental or consequential damages, or limitations on how long an implied warranty lasts, so the above exclusions or limitations may not apply to you. No other warranty, written or verbal, will be honored for this product. This warranty gives you specific legal rights and you may also have other rights that vary from state to state.

Diamond Storage Concepts is not responsible for damages of merchandise in transit. Repaired or replaced products shall be subject to the terms of this warranty, to be inspected by Diamond prior to return shipment. Damages incurred during transit should be reported at once to the carrier and a claim should be filed with them.

# Preparation and Safety Information

**IMPORTANT-READ THROUGH ENTIRE INSTRUCTIONS BEFORE BEGINNING INSTALLATION**

**Safety:**

Read and understand the warning on your stepladder and make sure the ladder is in good working order.

Examine all tools needed to insure they are in proper working order before starting.

Power tools that are not internally grounded require power cords and extension cords with a ground prong.

Always wear eye protection when drilling or installing parts.
HyLoft components are made of metal so beware of any sharp edges and do not let any components make contact with electrical current during installation.

DO NOT install more the one HyLoft unit on any two framing members.

**Preparation:**

The HyLoft unit can be installed in any area of garage, provided there is adequate space. When possible install so that all four sides are accessible for convenient loading.

Take care not to block attic or crawl space access, or lights.

If ceiling height allows for it, the unit may also be installed above the open garage door. If installing above an open door, measure between the highest point of the opening garage door and the ceiling to determine if there is adequate room for the unit. You will need at least 25 inches of open space between the ceiling and the highest point of the door during operation.

Clear the area where the HyLoft unit is to be installed, and don’t leave autos parked under the unit during installation.

Locate any gas, electrical, and plumbing lines in the garage before drilling holes in the drywall.

**NOTE:** We refer to Joists throughout the instructions. Joists are also called Ceiling Studs or Framing Members.

# ASSEMBLY INSTRUCTIONS

SuperPro 48" X 96"
Ceiling Mounted Shelf
Item # 00164

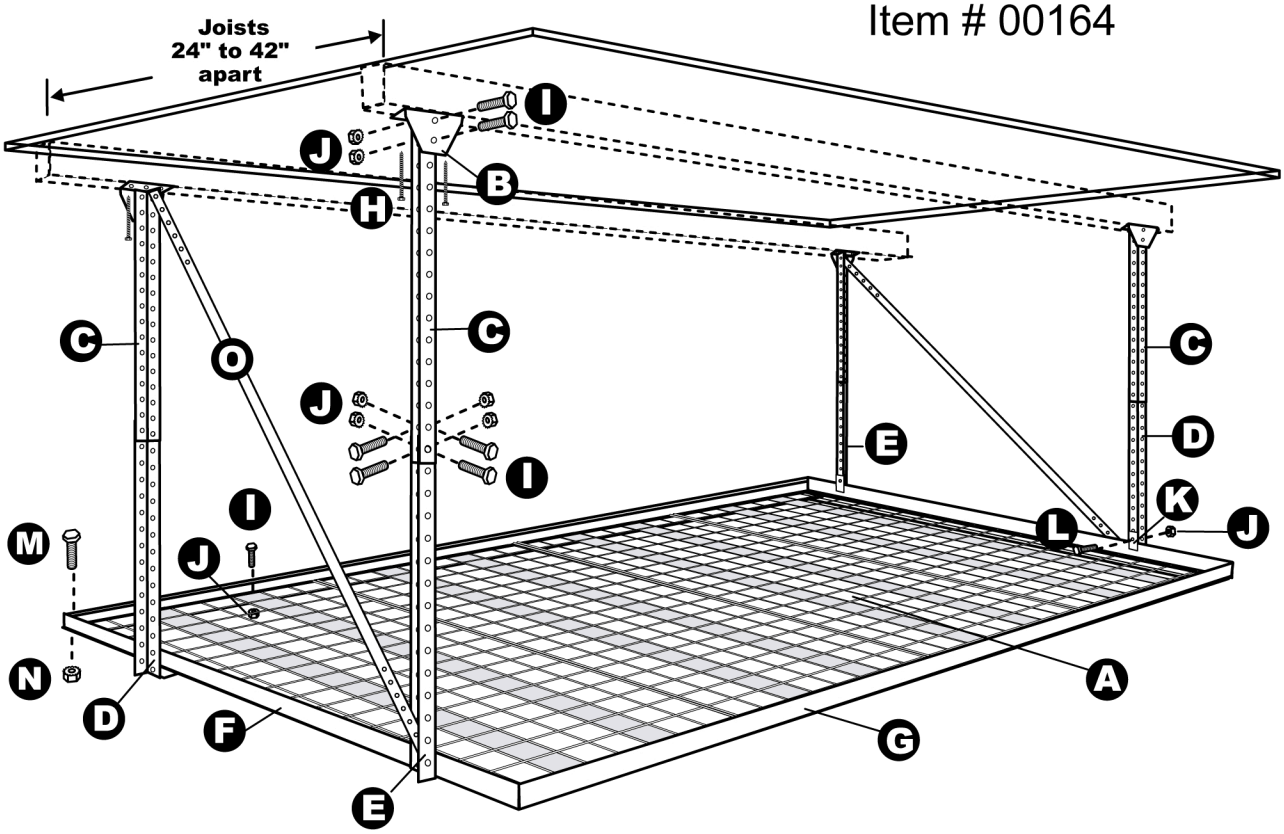


**Parts Included:** **IMPORTANT-Read through entire instructions before beginning any installation.**

**A** 4-Wire Grids 24" x 48"

**B** 4-Angle Brackets

**C** 4-Downrods-Straight

**D** 2-Left Facing Downrods with Feet

**E** 2-Right Facing Downrods with Feet

**F** 2-48" Support Frames

**G** 2-96" Support Frames

**H** 8-Lag Screws ¼" X 3" (6mm x 76mm)

**I** 44-Hex Bolts 5/16" X ½" (8mm x 13mm)

**J** 48-Hex Locking Nuts 5/16"(8mm)

**K** 4-Clamps

**L** 4-Hex Bolts 5/16" x 1.5" (8mm x 19mm)

**M** 4-Hex Bolts ¼" x ½" (6mm x 13mm)

**N** 4-Hex Nuts Serrated ¼" (6mm )

**O** 2-Diagonal Supports

**Tools Required:**

3/16" Drill Bit (4.8mm)

Power Drill

7/16" Wrench (11 mm) OR 7/16"(11 mm) Socket Wrench or Nut Driver

Stud/Joist Finder (optional)

Framing Square (optional)

Pencil

Eye Protection

Tape Measure

Ladder or Step Stool

**IMPORTANT-READ THROUGH ENTIRE INSTRUCTIONS BEFORE BEGINNING INSTALLATION**

Locate the ceiling joists in the area of desired installation and determine the direction in which they are running. The ceiling Angle Brackets(B) are installed parallel to the ceiling joists. Refer to the diagram below for additional installation clarification.

# 1 INSTALL CEILING ANGLES ON 48" SIDE

**See last page for alternate mounting situations.**

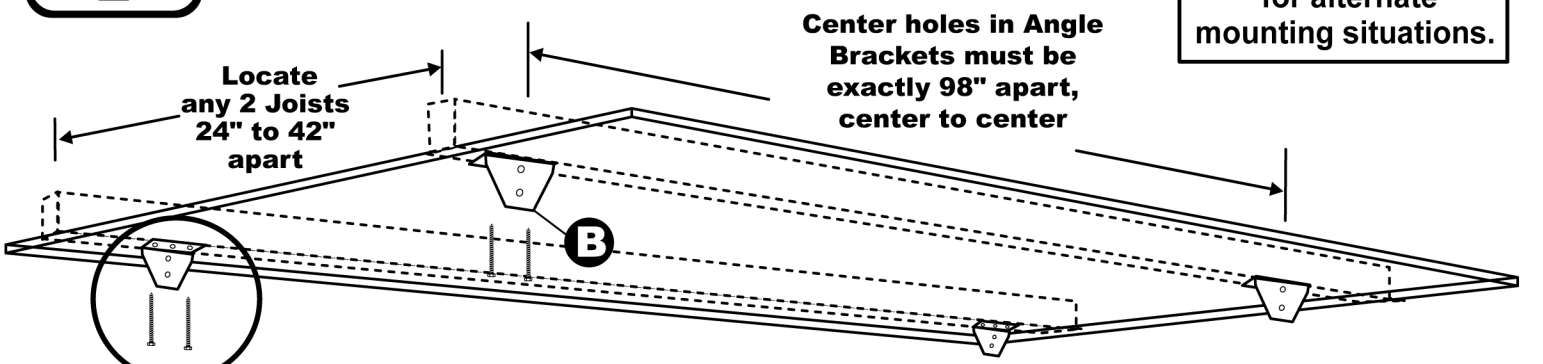


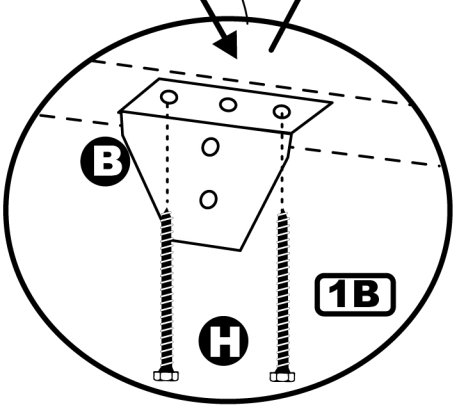


**1A** Use Center Holes in Angle Brackets(B) as a template to mark holes on stud. Use joists 24"-42" apart.

There must be exactly 98" center to center, measuring between center holes in Brackets(B) along the same joist **TIP-**It may be easier to measure from the outside of first bracket(B) to the inside of the next bracket (also 98").

**IMPORTANT-Brackets must be mounted perfectly in line and square to each other.**

**1B** Pre-drill 3/16"holes for each screw. Use a 7/16" Socket Wrench or Nut Driver to install two of the 1/4 x 3" Lag Screws(H) into each Angle Bracket(B).

# 2 ATTACH DOWNRODS

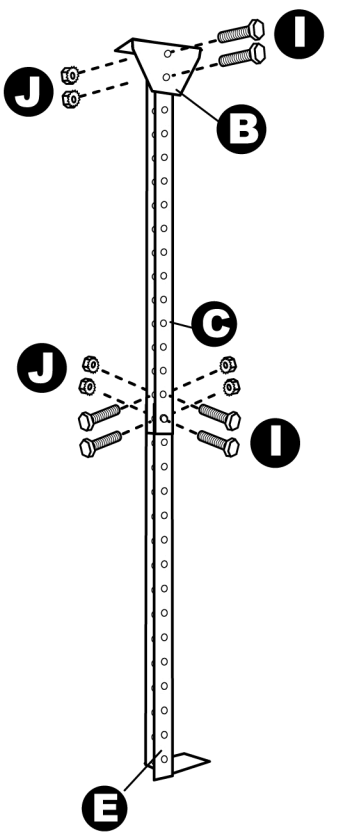


Determine hanging height and overlap & attach 2 Left Facing Downrods(D) & 2 Right Facing Downrods(E) to each Straight Downrod(C) using 4 Hex Bolts(I) and Hex Nuts(J). Tighten with 1/2" Socket Wrench or Nut Driver.

Attach 4 straight Down Rods(C) to each Angle Bracket(B) using 2 Hex Bolts(I) and Hex Nuts(J). Tighten with 1/2" Socket Wrench or Nut Driver. Make sure one side of each Down Rod(C) is facing the inside where the grids will be and that the Feet on Left and Right Facing Downrods(D & E) are to the inside.

# 3 ATTACH SUPPORT FRAMES

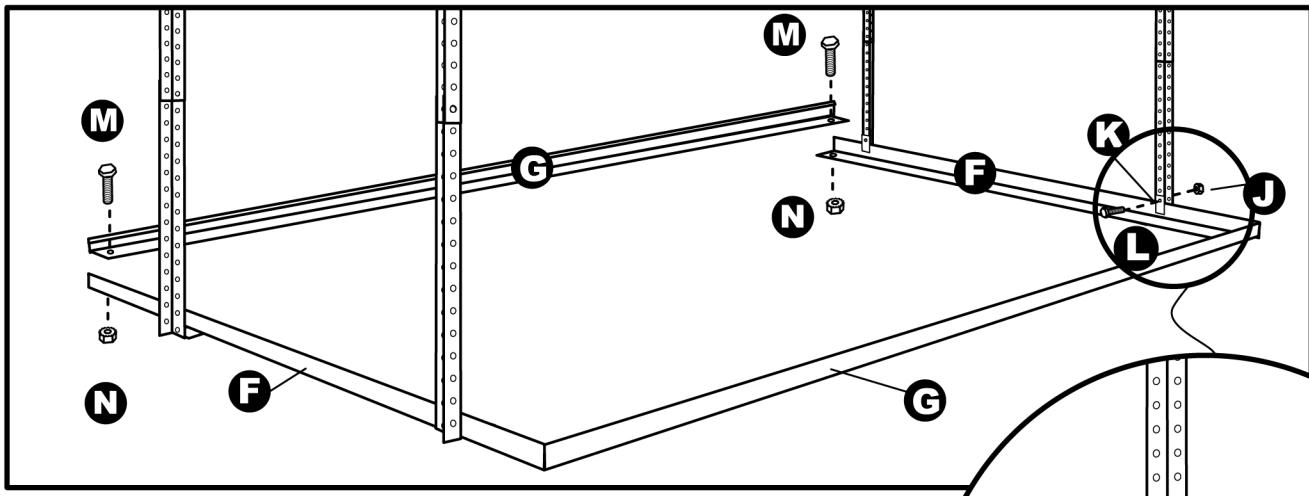


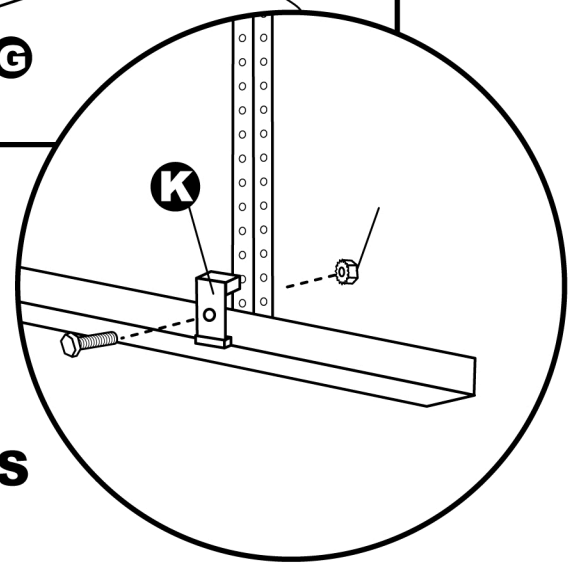


Place two 48" Support Frames(F) on top of feet and using Clamps(K) with thick part up, fasten to downrod using Hex Bolts(L) and Nuts(J). Make sure ends of Support Frames(F) are even and square. Place 96" Support Frames(G) on top of 48" Support Frames (F) and loosely bolt together in each corner using ¼" Hex Bolts(M) and Nuts(N) using a 7/16" wrench or nut driver. Do not tighten until after placing grids.

# 4 PLACE AND ATTACH GRIDS

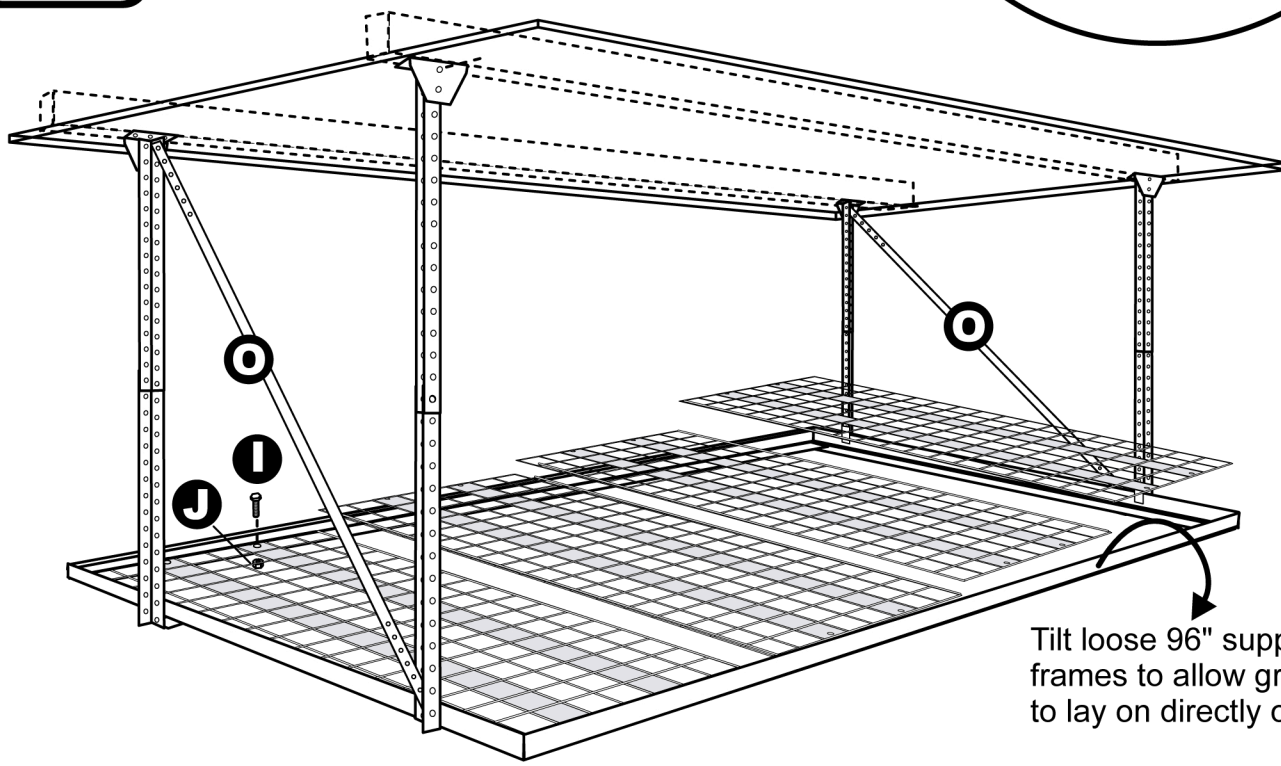


Lay 4 Wire Grids(A) evenly on 96" Support Frames with grid stiffeners on the underside. Tilt loose 96" Support Frames if necessary. Tighten bolts in each corner of support frames using ¼" Hex Bolts(M) and Nuts(N) wth a 7/16" wrench or nut driver. Fasten Wire Grids(A) as shown using 4 Hex Bolts(I) and Hex Nuts(J) for each grid.

Attach Diagonal Support Brackets(O) after making sure unit is level and square.

Make sure that all nuts, bolts and screws are tight. Do not load with more than 600 lbs, evenly distributed.

SuperPro 48" X 96"
Ceiling Mounted Shelf
Item # 00164

# ALTERNATE INSTALLATIONS

**Multi-Directional Joists:**

If joists change direction, 2 or all 4 Downrods (C&E) can be installed on the 96" side. Rotate direction of Angle Brackets (B) and Downrods (C&E) & install as shown in steps 1-3 of original instructions. Clamps(K) must be used to attach the downrod to the 96" support Frame (G), or if preferred, drill holes in the 96"Support Frame (G) & Downrods (E) to fasten with Bolt (L) and Nut (J).

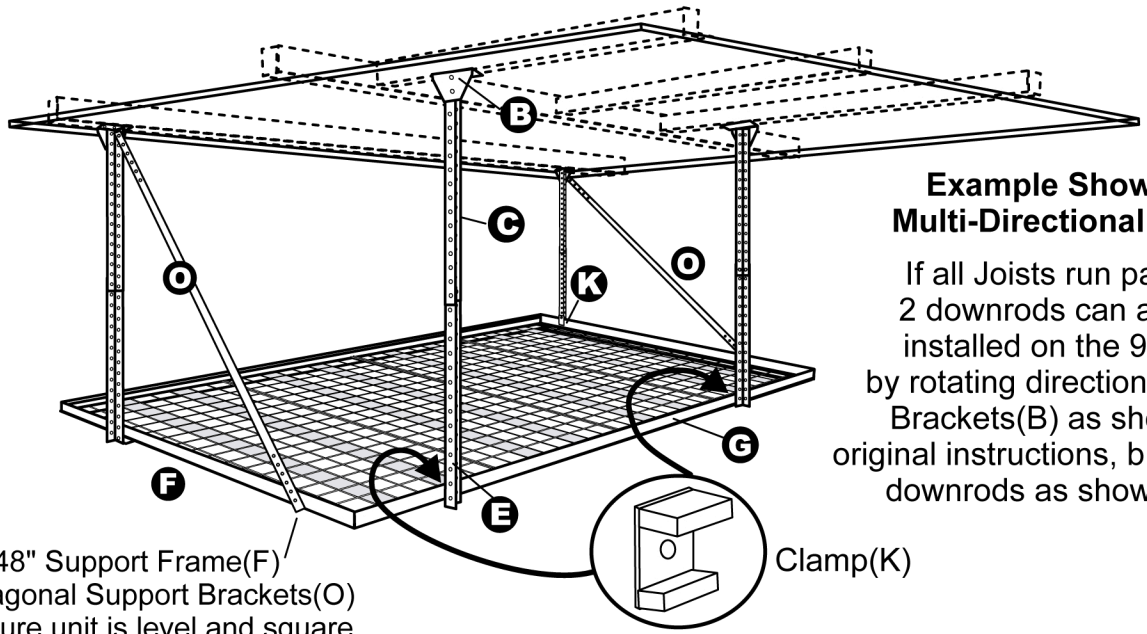


**Example Shown of Multi-Directional Joists**

If all Joists run parallel, 2 downrods can also be installed on the 96" side by rotating direction of Angle Brackets(B) as shown on original instructions, but installing downrods as shown here.

Drill hole into 48" Support Frame(F) and attach Diagonal Support Brackets(O) after making sure unit is level and square.

**Peaked or Cathedral Ceilings:**

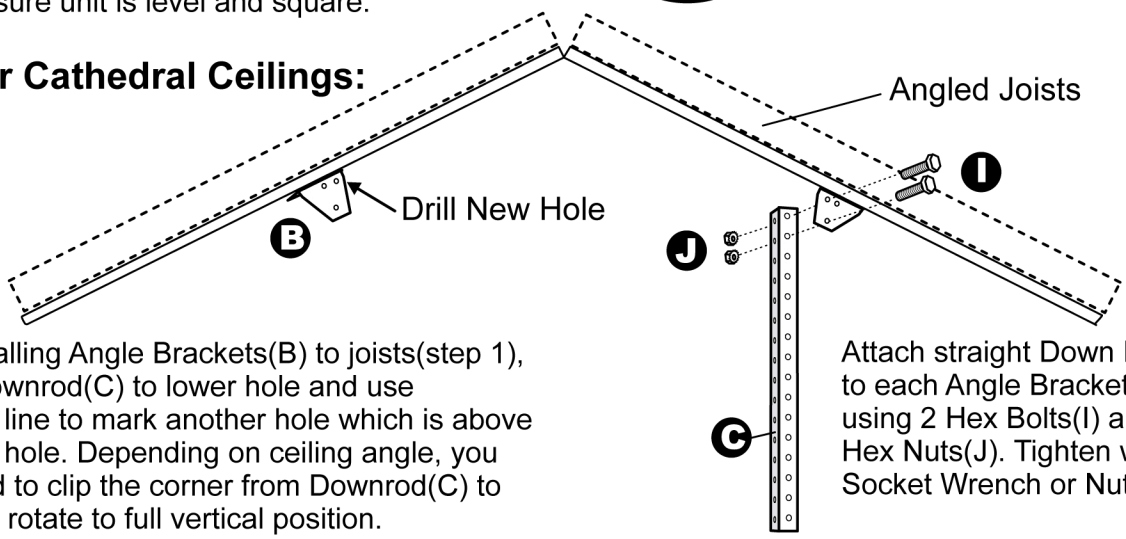


After installing Angle Brackets(B) to joists(step 1), attach Downrod(C) to lower hole and use as plumb line to mark another hole which is above the lower hole. Depending on ceiling angle, you may need to clip the corner from Downrod(C) to allow it to rotate to full vertical position. Drill new 3/8" holes so that Downrods (C) will mount true vertical .

Attach straight Down Rods(C) to each Angle Bracket(B) using 2 Hex Bolts(I) and Hex Nuts(J). Tighten with ½" Socket Wrench or Nut Driver.

Adjust lower downrods at variable heights if needed so that Support Frames(F&G) will be level when installed. Continue with Steps 3 & 4.