COLUMBIA PRODUCTS
SANI-LAV®

Operating Manual for Two-Person Hands-Free Floor Mounted Wash Stations
Models 54F1, 54F1-1.0 and 54F1-0.5



Columbia does not recommend use with harsh chemicals.
NSF/ANSI Standard 2 - Food Equipment and NSF/ANSI 372 low-lead.

Parts List

- ☐ (1) Floor mount wash station
- ☐ (1) Leg assembly set
- ☐ (4) Washers and nuts for connection sink to leg assembly set
- ☐ (2) Single foot pedal valve (bottom mount) with 4 nuts
- ☐ (2) Swivel gooseneck spout with aerator
- ☐ (2) Connecting tube for valve to spout connection
- ☐ (4) Fittings, brass, 0.375" male compression and 0.375" male NPT
- ☐ (2) Mixing check valve
- ☐ (1) Strainer assembly with basket

Tools Required

- ☐ Tape Measure
- ☐ Adjustable Wrench
- ☐ Drill Motor and Drill Bits
- ☐ Pipe Wrench
- ☐ Level
- ☐ Safety Glasses
- ☐ Screw Drivers: 1 Phillips & 1 Standard
- ☐ Pencil
- ☐ Socket Wrench

Installation Instructions

Step 1

1. 2 and 3-Person models require leg assembly.
2. Place wash station sink on leg assembly and secure with hardware (provided).
3. Establish sink location.
4. Mark the floor where the four holes are at the base as shown in illustration A.
5. Drill holes as required for mounting hardware. (Hardware not included).

Step 2

1. Install spout assembly to the sink.
2. Install elbow fitting (provided) to the spout assembly.
3. Connect one side of the supply line (provided) to the spout assembly.
4. Install strainer assembly.

Step 3

1. Install mixing check valve and elbow fitting to valve.
2. Install foot pedal valves under the leg assembly cross bar if not mounted already.
3. Attach connecting tube from the spout to the foot pedal valve.

Step 4

1. Secure wash station to floor.
2. Connect waste line to strainer assembly.
3. Connect water supplies (hot and cold) to the mixing check valve.

Step 5

1. Remove aerator from the spout assembly and flush water line by pressing pedal for 30 seconds.
2. Check connections for leaks. Replace aerator onto the spout assembly.
3. Seal gap between bowl and leg assembly as shown in illustration B.
4. When mounting against wall, we recommend sealing top of backsplash to wall as shown in illustration C.



Illustration A



Illustration B



Illustration C

COLUMBIA PRODUCTS

1622 Browning ▪ Irvine, CA ▪ 92606-4809 ▪ Phone: 949.474.0777 ▪ Toll Free: 800.626.2117 ▪ Fax: 949.474.1191 ▪ www.columbiasinks.com ▪ email: info@columbiasinks.com

©2016 Columbia Products

Trouble Shooting Guide

Problem	Possible Cause	To Diagnose	Remedy
Water drips from spout or valve stem assembly.	Flat washer on the stem/plunger is worn.	To determine if the leak source is from the hot or cold side shut cold water source off. See if water still leaks from the spout. If leak continues then repair hot side if not repair cold side.	We recommend installing valve repair kit.
Water leaks from the front of the valve.	O-Rings on the plunger are worn out.	Visually determine whether the cold or hot side is leaking.	We recommend replacing threaded insert, plunger assembly & spring. See illustrations below.

Valve Repair Instructions

Note: Valves are designed to be repaired without having to be disconnected from mount or plumbing.

1. Turn off water source. Do not remove valve from sink.
2. Remove pedal assembly using a 15/16" open end wrench or socket wrench. As shown in illustration A.
3. Using a 1" deep socket wrench remove insert assembly parts as show in illustration B.
4. Replace with new repair kit as shown on illustration C.
5. Reinstall pedal assembly and turn water source on.

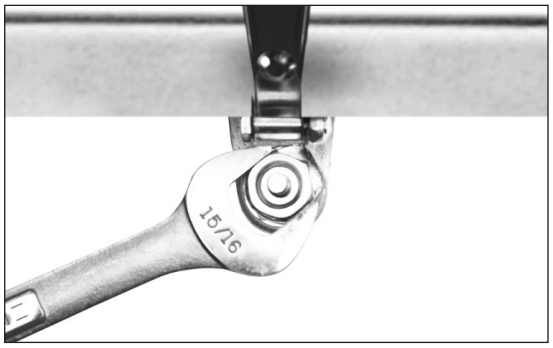

Illustration A

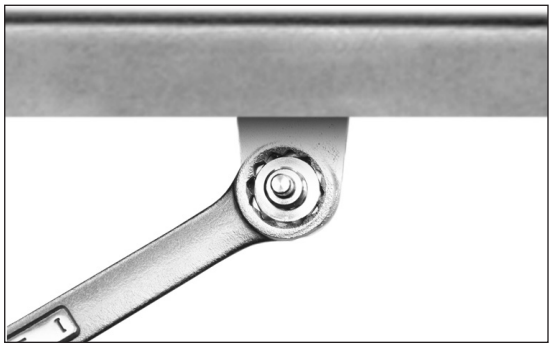

Illustration B

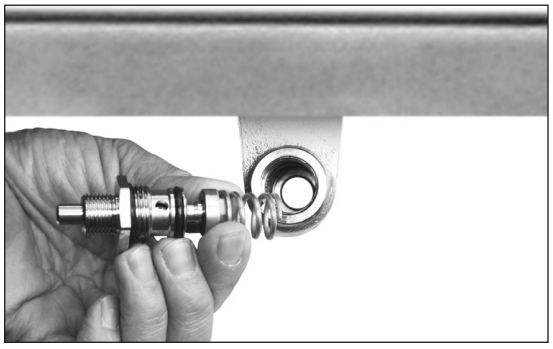

Illustration C

1622 Browning ▪ Irvine, CA ▪ 92606-4809 ▪ Phone: 949.474.0777 ▪ Toll Free: 800.626.2117 ▪ Fax: 949.474.1191 ▪ www.columbiasinks.com ▪ email: info@columbiasinks.com

©2016 Columbia Products

Top

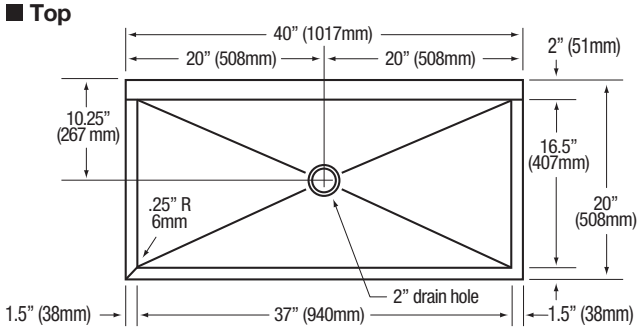

Front

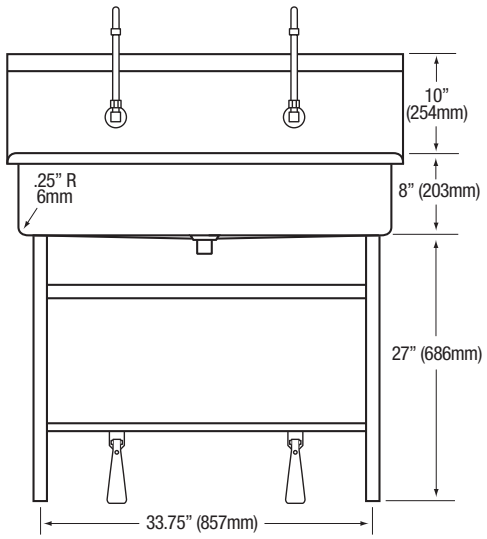

Side

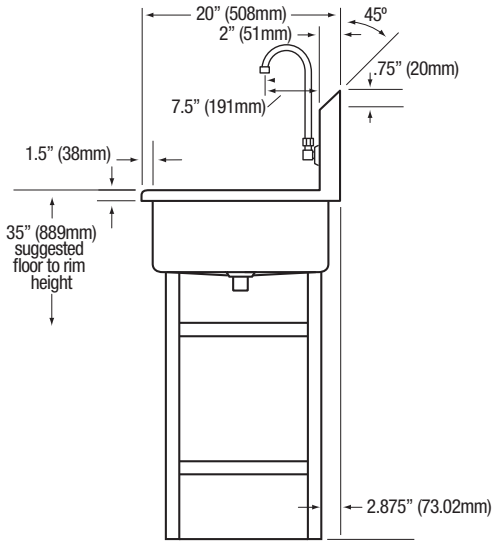

Hole Configurations

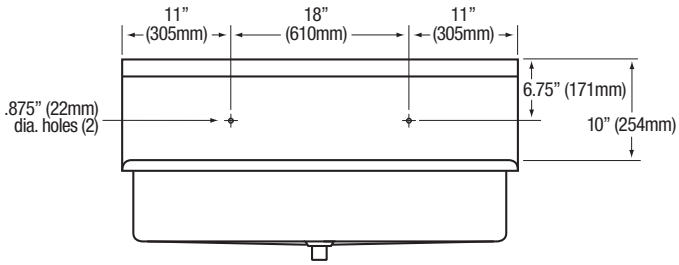

Leg Specifics

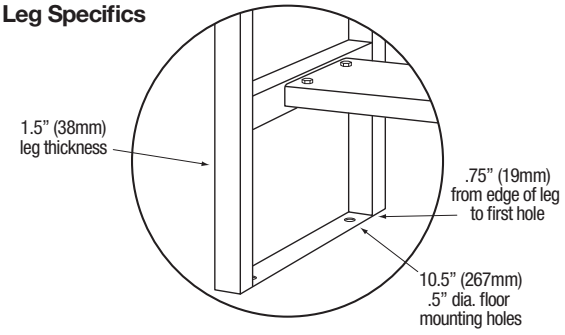

COLUMBIA PRODUCTS

1622 Browning ▪ Irvine, CA ▪ 92606-4809 ▪ Phone: 949.474.0777 ▪ Toll Free: 800.626.2117 ▪ Fax: 949.474.1191 ▪ www.columbiasinks.com ▪ email: info@columbiasinks.com

©2016 Columbia Products