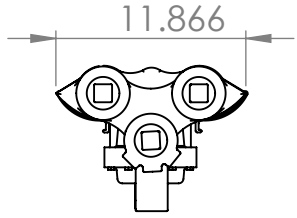
11.866

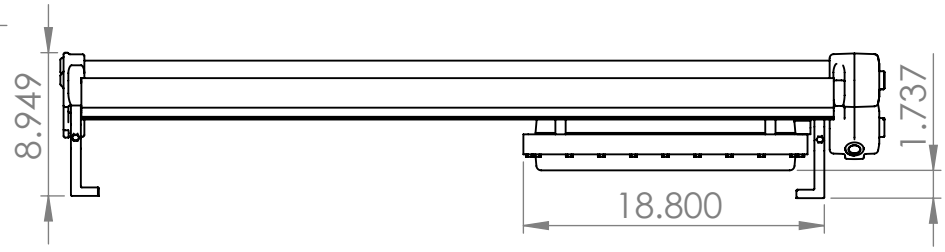
8.949
1.737
18.800

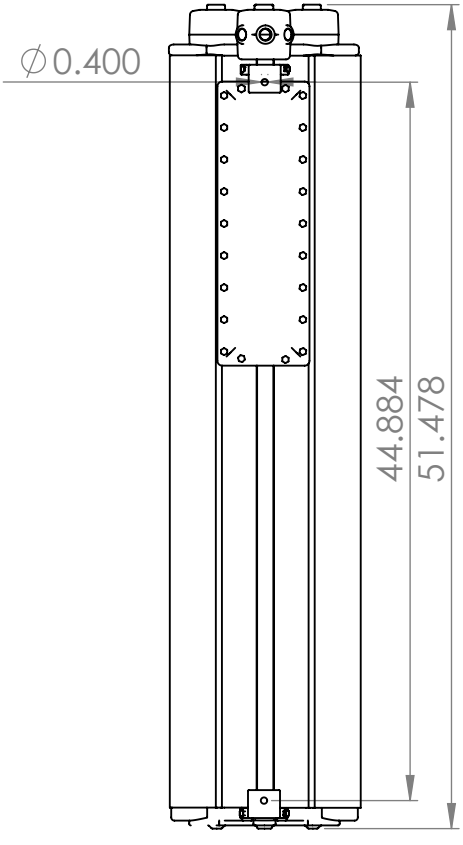
∅0.400
44.884
51.478

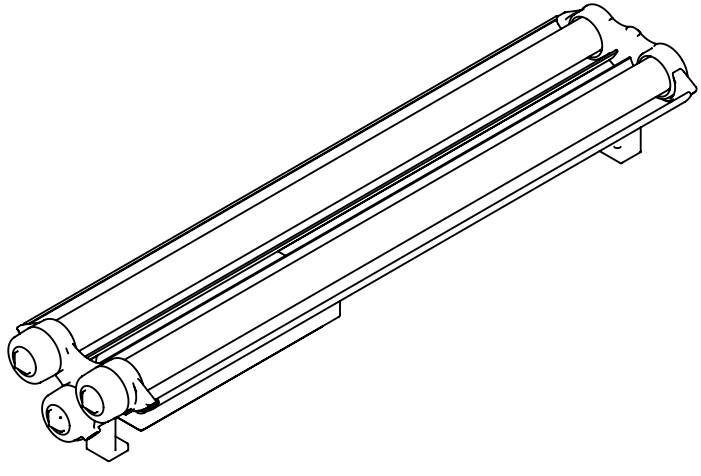

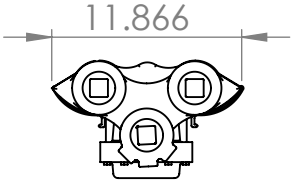
11.866

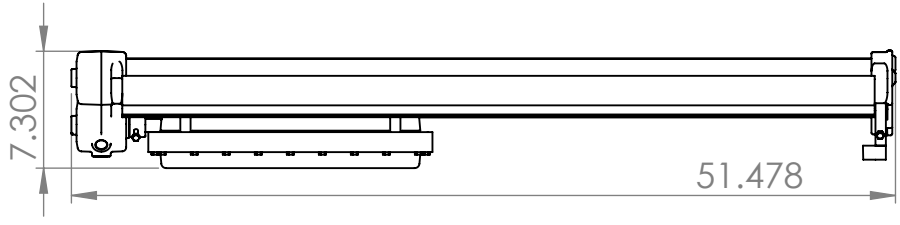
7.302
51.478

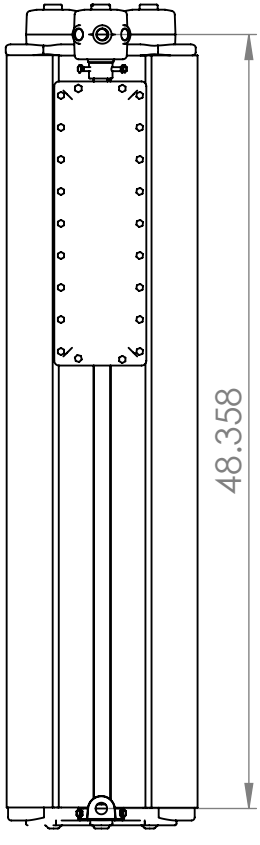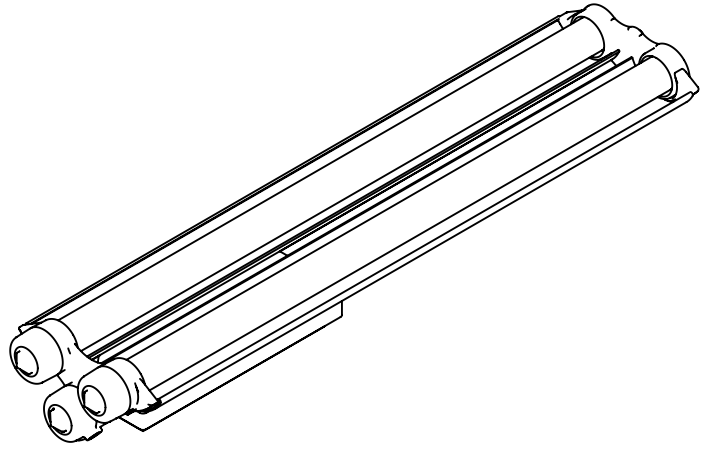
48.358