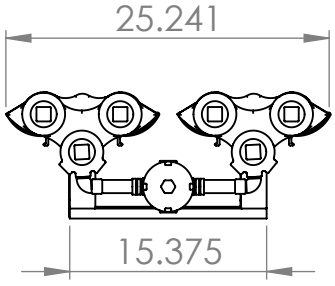
25.241
15.375

9.820
52.262

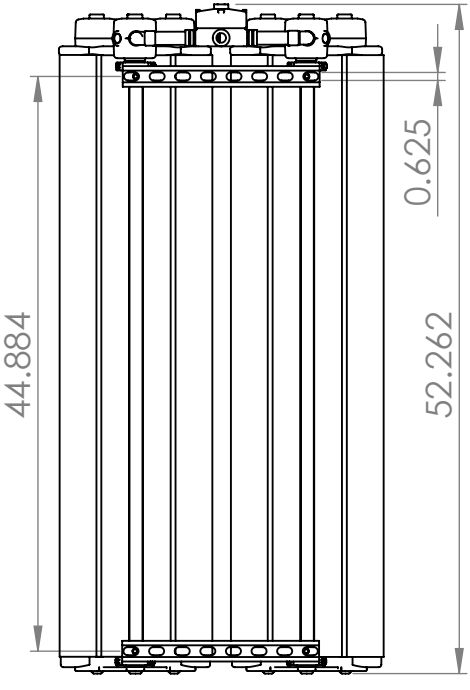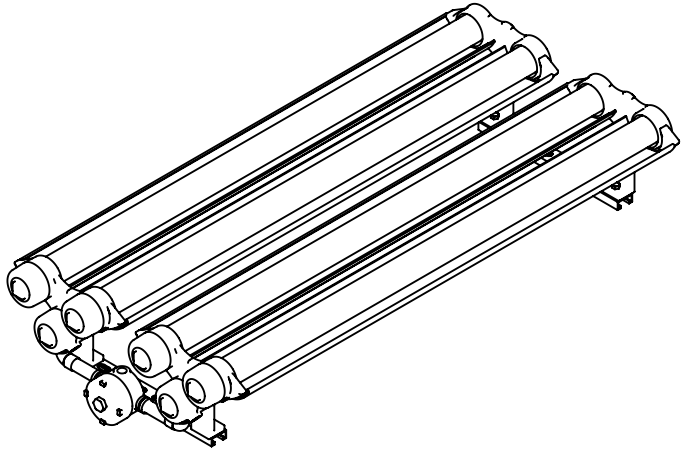
0.625
44.884
52.262