EE9002F

DUAL VOLTAGE
CAP START/CAP RUN
REVERSIBLE WITH
OVERLOAD PROTECTION

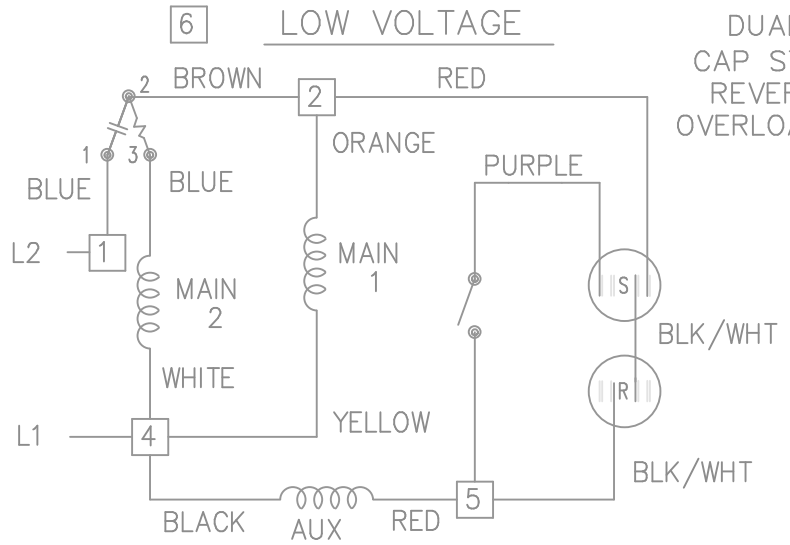

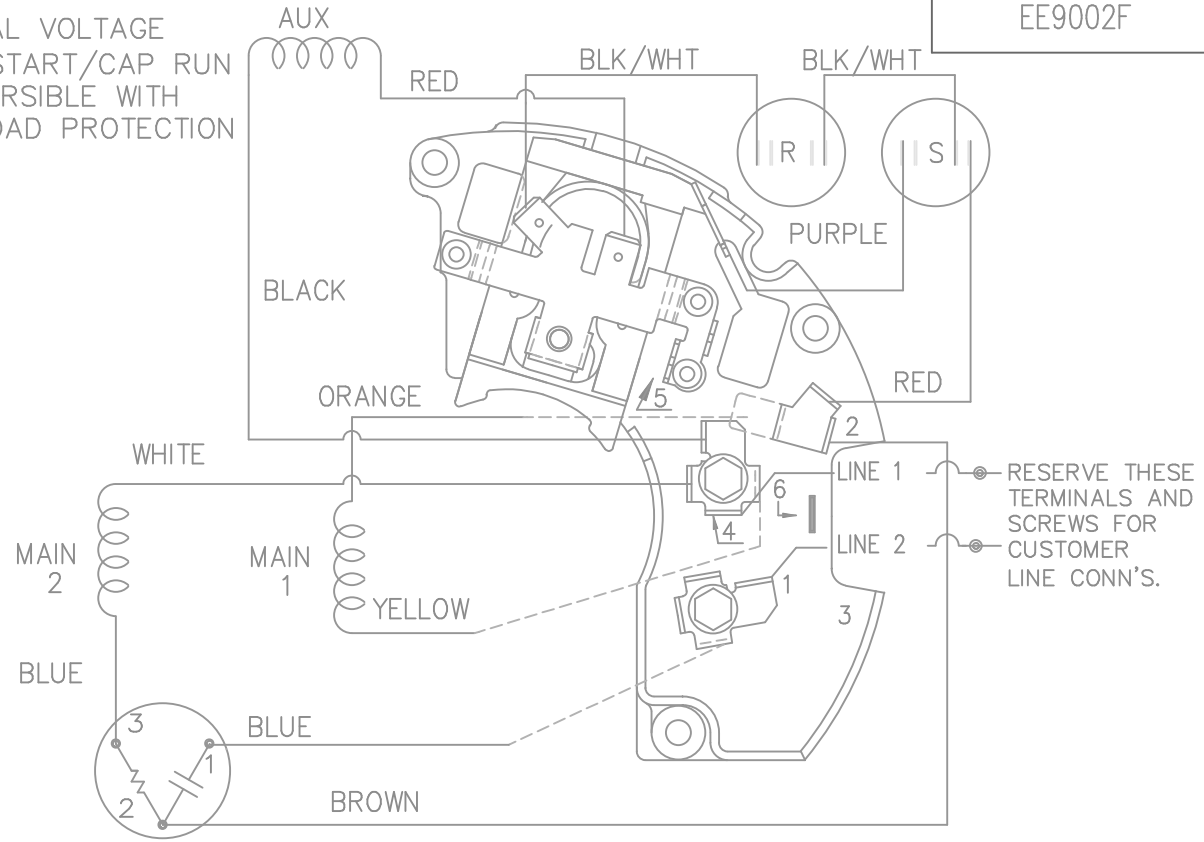

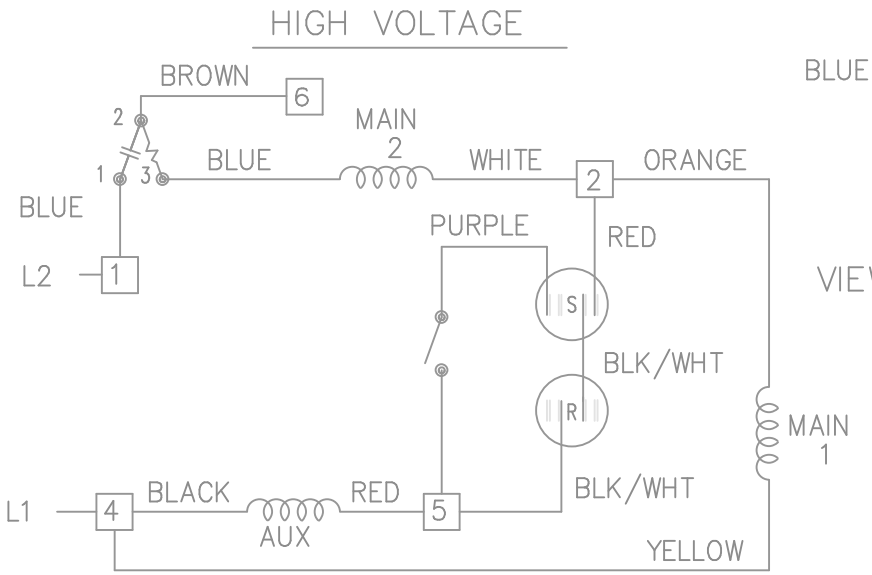

LOW VOLTAGE CCW ROTATION SHOWN.

FOR HIGH VOLTAGE
CONNECT BROWN TERM 2 TO TERM 6.
CONNECT WHITE TERM 4 TO TERM 2.

TO REVERSE ROTATION EITHER
VOLTAGE INTERCHANGE RED
LEAD WITH BLACK LEAD.

DASH LINES INDICATE LEADS CONNECTED
TO MOTOR SIDE OF SWITCH.

NO.	REVISION	BY & DATE	CHK
5	REVISED LINE 2 LOCATION	RM 01-28-1991	
4	UPDATED SCHEMATIC PER CN 6014	DA 08-01-1990	
3	RED LEAD FROM AUX WAS ON ANGLE TERM.	DA 07-02-1990	
	PURPLE LEAD WAS RED CN 6014		
2	ADDED CUSTOMER CONNECTION NOTE. CN 6011	BW 08-03-1989	
1	NEW DRAWING	ML 08-19-1988	

TOLERANCES UNLESS SPECIFIED

DEC.	INCHES	
.X	±	–
.XX	±	–
.XXX	±	–
.XXXX	±	–
ANG	±	–

MARATHON ELECTRIC

TITLE CONNECTION DIAGRAM
48 FR. DUAL VOLTAGE REVERSIBLE

MAT'L.

FINISH

DRAWN	ML	02-11-1988
CHK	FG	02-11-1988
APPD	DNR	03-11-1988
SCALE	1=1	
REF		
FMF		
PREV		

THIS DRAWING IN DESIGN AND DETAIL IS OUR PROPERTY AND MUST NOT BE USED EXCEPT IN CONNECTION WITH OUR WORK ALL RIGHTS OF DESIGN AND INVENTION ARE RESERVED
THIS IS AN ELECTRONICALLY GENERATED DOCUMENT – DO NOT SCALE THIS PRINT

RFP

DIST WP

CAD FILE EE9002F

SIZE	DRAWING NO.	PAGE OF	REV.
A	EE9002F		5

9/30/2008 5:54:41 AM